T13-A ROOF PANEL

Condensed Technical Reference

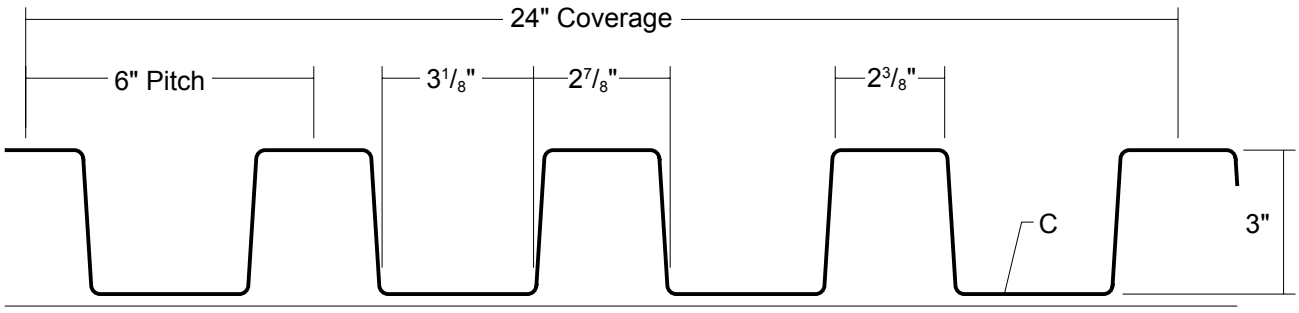

ARCHITECTURAL COMMERCIAL INDUSTRIAL PANEL

EXPOSED FASTENED

24" COVERAGE

MINIMUM SLOPE 1:12

OPEN FRAMING OR SOLID SUBSTRATE

PANEL OVERVIEW

- Finishes: Standard: PVDF
  Optional: Multi-pass Kynar®, Marblique, Plastisol, Polyester and MS Colorfast45®
- Corrosion Protection: AZ55 per ASTM A 792 for unpainted Galvalume®
  AZ50 per ASTM A 792 for painted Galvalume®
  G90 per ASTM A 653 for Galvanized
- Gauges: 24 ga, 22 ga, 20 ga and 18 ga
- 24" panel coverage, 3" rib height
- Trapezoidal ribs on 6" centers
- Panel Length: 5' minimum, 32' maximum
- Exposed Fastened Panel
- Minimum Roof Slope 1:12
- Optional material availablity: Stainless Steel, Copper and Aluminum

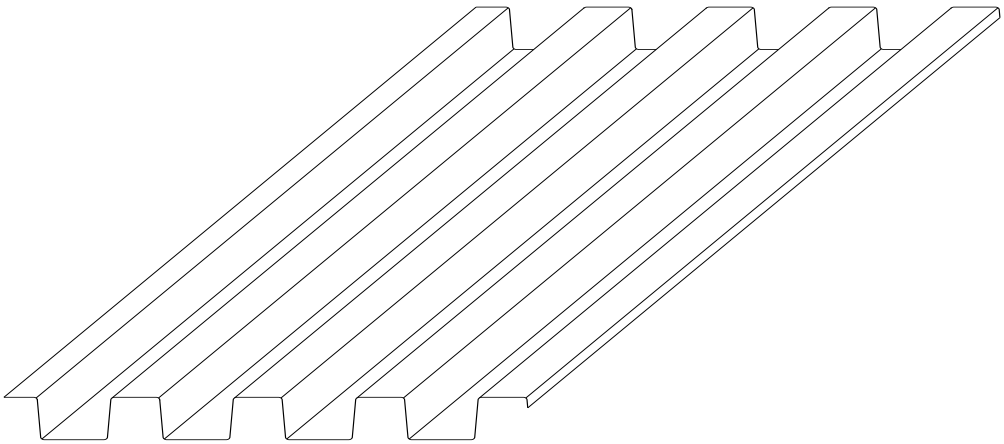

metal sales™ manufacturing corporation

T13-A ROOF PANEL

Condensed Technical Reference

ATTACHMENT DETAIL

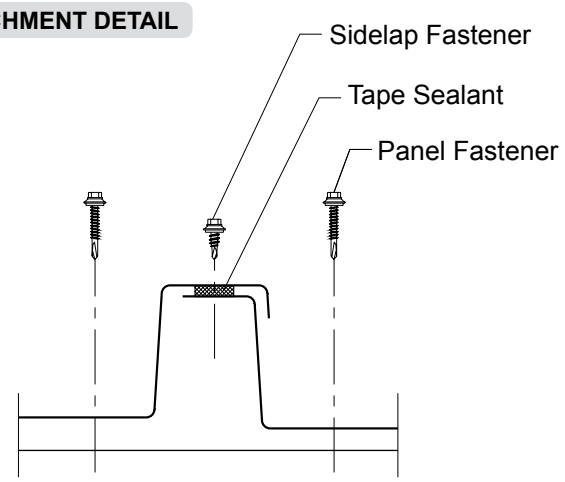

FASTENING PATTERN

Ends and Field of Panel

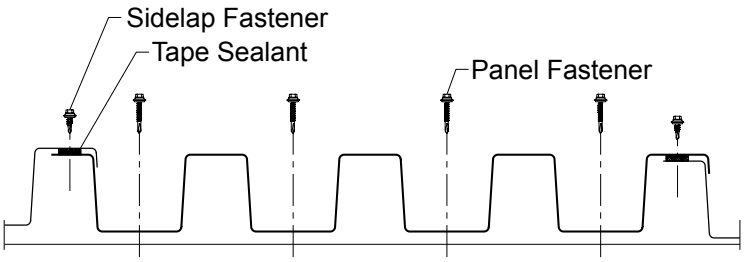

FASTENER INFORMATION

Overdriven fasteners will cause panel distortion.

Panel fasteners should extend 1/2" or more past the inside face of the support material.

Thick panels (ex. 18 ga) or supports (ex. 1/2" steel) may require predrilling of holes for screws.

Panel Fastener:
- Attaching to Wood:
  - #10-14 XL Wood Screw
- Attaching to Steel:
  - #12-14 XL Self Drilling Screw

Sidelap Fastener:
- 1/4"-14 x 7/8" XL Stitch Screw

Trim Fastener:
- 1/8" x 3/16" Pop Rivet
- 1/4"-14 x 7/8" XL Stitch Screw

SECTION PROPERTIES								ALLOWABLE UNIFORM LOADS, psf For various fastener spacings											
Ga	Width in	Yield ksi	Weight psf	Top in Compression		Bottom in Compression		Inward Load						Outward Load					
				Ixx in^4/ft	Sxx in^3/ft	Ixx in^4/ft	Sxx in^3/ft	5'	6'	7'	8'	10'	12'	5'	6'	7'	8'	10'	12'
24	24	50	1.78	0.5785	0.3264	0.5390	0.3037	248	179	134	105	68	48	261	189	143	112	73	51
22	24	50	2.33	0.8225	0.4869	0.7700	0.4559	400	283	210	162	105	73	423	300	223	173	112	78
20	24	33	2.85	1.0945	0.6782	1.0340	0.6427	383	269	199	153	98	68	403	283	209	161	104	72
18	24	33	3.75	1.5150	0.9674	1.4500	0.9355	555	390	289	222	143	99	573	403	298	229	148	103

1. Theoretical section properties have been calculated per AISI 2012 'North American Specification for the Design of Cold-Formed Steel Structural Members'. Ixx and Sxx are effective section properties for deflection and bending.
2. Allowable loads are calculated in accordance with AISI 2012 specifications considering bending, shear, combined bending and shear and deflection. Allowable loads consider the 3 or more equal span condition. Allowable loads do not address web crippling, fasteners, support material or load testing. Panel weight is not considered.
3. Deflection consideration is limited by a maximum deflection ratio of L/180 of span.
4. Allowable loads do not include a 1/3 stress increase for wind.

©MST13-AR/3-2016

metal sales manufacturing corporation
metalsales.us.com

Anchorage, AK 866.640.7663
Bay City, MI 888.777.7640
Deer Lake, PA 800.544.2577
Denver, CO 800.289.7663
Detroit Lakes, MN 888.594.1394
Fontana, CA 800.782.7953
Fort Smith, AR 877.452.3915
Independence, MO 800.747.0012
Jacksonville, FL 800.394.4419
Jefferson, OH 800.321.5833
Mocksville, NC 800.228.6119
Nashville, TN 800.251.8508
Rock Island, IL 800.747.1206
Rogers, MN 800.328.9316
Seattle, WA 800.431.3470
Sellersburg, IN 800.999.7777
Sioux Falls, SD 888.902.8320
Spokane, WA 800.572.6565
Temple, TX 800.543.4415
Woodland, CA 800.759.6019