SEAM-LOC 24®

Condensed Technical Reference

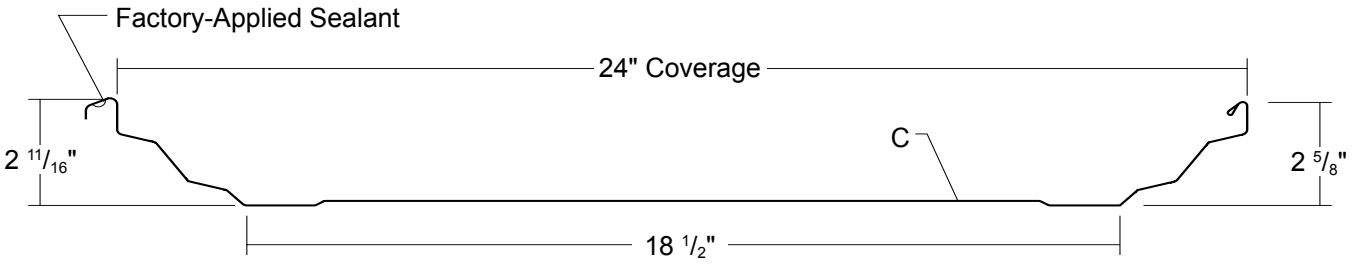

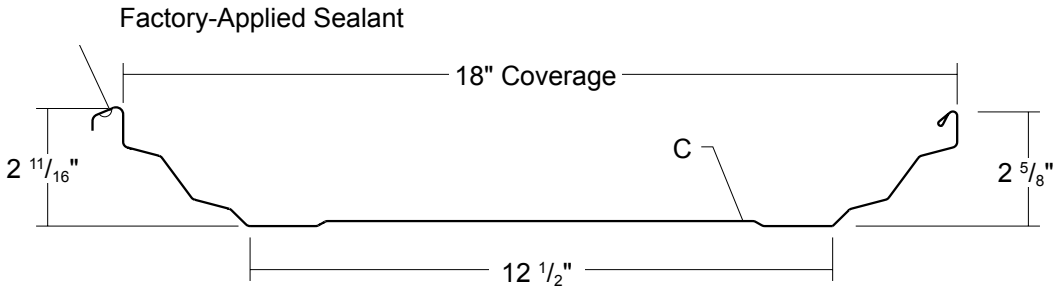

COMMERCIAL INDUSTRIAL PANEL | **CONCEALED FASTENED** | **24" OR 18" COVERAGE** | **MINIMUM SLOPE 1/4:12** | **OPEN FRAMING OR SOLID SUBSTRATE**

PANEL OVERVIEW

- Finishes: PVDF and Acrylic-Coated Galvalume®
- Corrosion Protection: AZ55 per ASTM A 792 for unpainted Galvalume®
  AZ50 per ASTM A 792 for painted Galvalume®
  G90 per ASTM A 653 for Galvanized
- Gauges: 24 ga standard; 22 ga optional
- 24" or 18" panel coverage, 2 11/16" rib height
- Panel Length: Minimum: 5'; Maximum: 45' recommended
- Structural trapezoidal standing seam roof system
- Pittsburgh double flat locking mechanically-seamed side lap
- Factory-applied side lap sealant in panel and clip
- Minimum roof slope: 1/4:12
- Panels can be factory-notched and punched
- Accommodates 1/2" to 6" blanket insulation

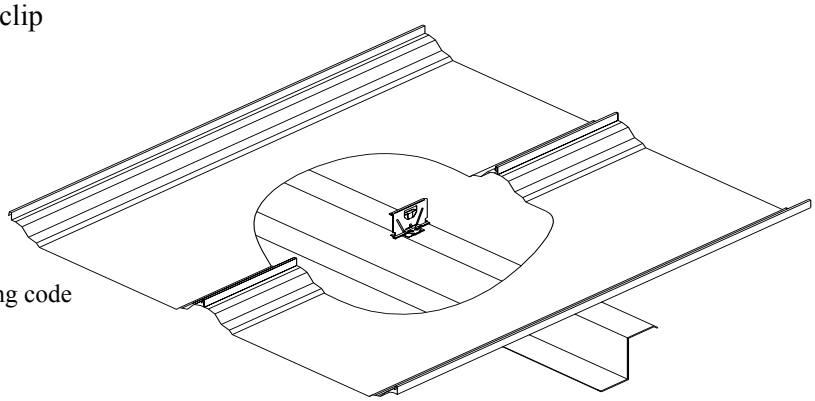

TESTING AND APPROVALS

- UL 2218 Impact Resistance - Class 4
- UL 790 Fire Resistance Rating - Class A, per building code
- UL 263 Fire Resistance Rating - per assembly
- ASTM E 283 Air Leakage - 0.06 cfm/ft^2 at 6.24 psf
- ASTM E 331 Water Penetration - none at 6.24 psf
- ASTM E 1680 Air Leakage - 0.0011 cfm/ft^2 at 6.24 psf
- ASTM E 1646 Water Penetration - none at 12 psf
- ASTM E 1592 Structural Performance
- UL 580 Uplift Resistance - Class 90 Constructions: #197 and #197A
- FM 4471 Roof Approval - Class 1-90 and 1-165
- 2017 FBC Approvals - FL10999.8 and FL10999.9

metal sales™ manufacturing corporation

SEAM-LOC 24®

Condensed Technical Reference

ATTACHMENT DETAILS

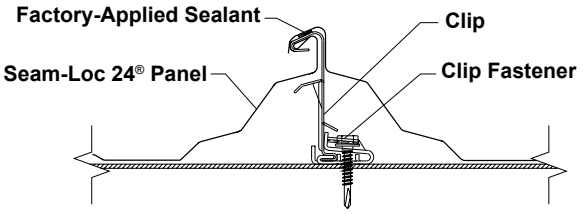

BEFORE SEAMING

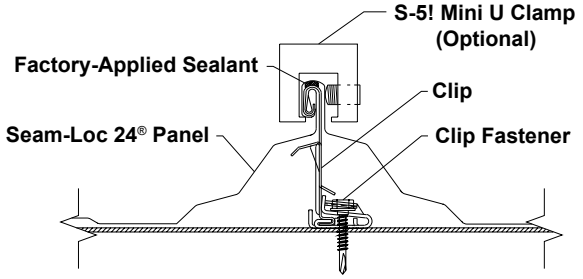

AFTER SEAMING

PANEL CLIP

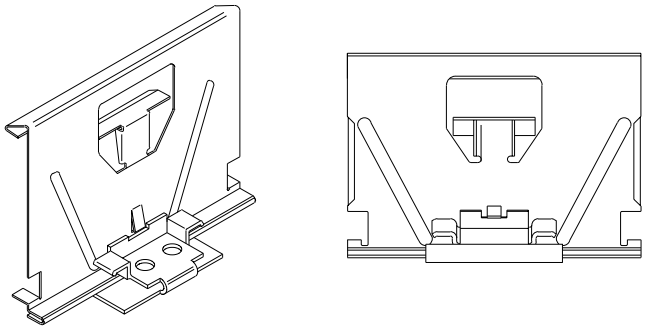

FASTENING INFORMATION

▶ Clips

Clip spacing is based upon the design loads, the spanning capacity of the panels, the fasteners and the support members.

Clip Tabs are 0.037" thick, G90. Clip base is 0.060" thick, G60.

Floating Clips can accomodate 1-1/2" of thermal movement each way.

▶ Fasteners

Overdriven fasteners will cause panel distortions.

Fasteners should extend 1/2" or more past the inside face of the support material.

Clip Fasteners:
- Attaching to Wood:
  - #10-12 Pancake Head Wood Scrw
- Attaching to Steel:
  - <18 ga: 1/4"-14 Deck Screw
  - >=18 ga, <=12 ga: 1/4"-14 Driller, No Washer
  - >12 ga: 1/4"-24 Driller, No Washer

Exposed End Fasteners:
- At Eave Plate or Compression Plate:
- #12-14 XL Driller

Concealed End Fasteners:
- At Compression Plate:
- #12-14 Driller, No Washer

Trim Fasteners:
- 1/4"-14 x 7/8" XL Stitch Screw

SECTION PROPERTIES								ALLOWABLE UNIFORM LOADS, psf For various clip spacings											
Ga	Width in	Yield ksi	Weight psf	Top In Compression		Bottom In Compression		Inward Load						Outward Load					
				Ixx in^4/ft	Sxx in^3/ft	Ixx in^4/ft	Sxx in^3/ft	2'	2.5'	3'	3.5'	4'	5'	2'	2.5'	3'	3.5'	4'	5'
24	24	50	1.09	0.2055	0.0952	0.0920	0.0653	342	227	161	120	93	60	70	64	59	54	49	38
24*	24	50	1.09	0.2055	0.0952	0.0920	0.0653	342	227	161	120	93	60	130	117	104	91	79	53
24	18	50	1.15	0.2480	0.1221	0.1220	0.0869	455	302	214	160	123	80	92	85	77	69	62	46
24*	18	50	1.15	0.2480	0.1221	0.1220	0.0869	455	302	214	160	123	80	167	150	133	116	99	65
22	24	50	1.43	0.2725	0.1263	0.1280	0.0882	458	305	217	161	125	81	74	69	64	59	54	44

1. Theoretical section properties have been calculated per AISI 2016 'North American Specification for the Design of Cold-Formed Steel Structural Members'. Ixx and Sxx are effective section properties for deflection and bending.
2. Allowable load is calculated in accordance with AISI 2016 specifications considering bending, shear, combined bending and shear and deflection. Allowable load considers the 3 or more equal spans condition. Allowable load does not address web crippling, fasteners, support material or load testing. Panel weight is not considered.
3. Deflection consideration is limited by a maximum deflection ratio of L/180 of span.
4. Allowable loads do not include a 1/3 stress increase for wind.

metal sales manufacturing corporation

metalsales.us.com

Anchorage, AK 866.640.7663
Bay City, MI 888.777.7640
Deer Lake, PA 800.544.2577
Denver, CO 800.289.7663
Detroit Lakes, MN 888.594.1394
Fontana, CA 800.782.7953
Fort Smith, AR 877.452.3915
Independence, MO 800.747.0012
Jacksonville, FL 800.394.4419
Jefferson, OH 800.321.5833
Mocksville, NC 800.228.6119
Nashville, TN 800.251.8508
Rock Island, IL 800.747.1206
Rogers, MN 800.328.9316
Seattle, WA 800.431.3470
Sellersburg, IN 800.999.7777
Sioux Falls, SD 888.299.0024
Spokane, WA 800.572.6565
Temple, TX 800.543.4415
Woodland, CA 800.759.6019