EVALUATION REPORT OF
METAL SALES MANUFACTURING CORPORATION
'NOM 0.032" THICK ALUMINUM VERTICAL SEAM PANEL'

FLORIDA BUILDING CODE 7TH EDITION (2020)
FLORIDA PRODUCT APPROVAL
FL 14645.6-R4
ROOFING
METAL ROOFING

Prepared For:
Metal Sales Manufacturing Corporation
545 South 3rd Street, Suite 200
Louisville, KY 40202
Telephone: (502) 855-4300
Fax: (502) 855-4200

Prepared By:
Bala Sockalingam, Ph.D., P.E.
Florida Professional Engineer #62240
1216 N Lansing Ave., Suite C
Tulsa, OK 74106
Telephone: (918) 492-5992
FAX: (866) 366-1543

This report consists of
Evaluation Report (3 Pages including cover)
Installation Details (1 Page)
Load Span Table (1 Page)

Report No. C2397-6
Date: 10.7.2020

BALA SOCKALINGAM
LICENSE
No 62240
STATE OF
FLORIDA
PROFESSIONAL ENGINEER

10.7.2020

Manufacturer:	Metal Sales Manufacturing Corporation
Product Name:	Aluminum Vertical Seam
Panel Description:	Standing seam panel with max. 16" wide coverage and 1.75" high ribs
Materials:	Min. nominal 0.032" thick 3004-H14 or 3105-H24 Alloy (ASTM B209) as per FBC 2020 Section 1507.4.3.
Deck Description:	Min. 19/32" plywood or min. ¾" thick wood plank (min SG of 0.42) for new and existing constructions. Designed by others and installed as per FBC 2020.
Deck Attachment:	Minimum attachment: 8d x 2.5" long ring shank nails or #8 x 2" long wood screws at 6" o.c. in the plywood field and edges. Deck fastener spacing at 3" o.c. in the plywood field and edges for roof zones installed with support strap. Designed as per FBC 2020.
Underlayment:	Minimum underlayment as per FBC 2020 Section 1507.4.5.1.
Substrate (optional):	Min 1" x 4" No. 2 SYP wood purlins over min. 19/32" thick plywood deck fastened to supports at maximum 24" o.c. Wood purlins shall be fastened to wood rafters with (2) #9 x 3" long wood screws. The wood purlins will be spaced same as panel fastener spacing along panel length. The wood purlin, purlin to the rafter connection and rafters must be designed by others to the carry the load imposed on the panels and installed as per FBC 2020.
Slope:	1/4:12 or greater in accordance with FBC 2020 Section 1507.4.2
Allowable Uplift Load: (Factor of Safety = 2)	41.6 psf at clip spacing of 36" o.c. 100.2 psf at clip spacing of 12" o.c. 162.0 psf at clip spacing of 12" o.c. with support strap
Fastener Pattern: At panel seam	Panel clip (QMS 4923565) with (2) #10-12 pancake head screws per clip. Fastener shall be of sufficient length to penetrate through the deck a minimum of 1/4". Clips and fasteners are corrosion resistant as per FBC 2020 Section 1506.7 and 1507.4.4, respectively.
Support Strap:	4.25" wide, 24 ga., 50 ksi strap fastened to deck with 2 rows of #10-12 x 1" long pancake head screws at staggered 12" o.c. spacing. The strap is continuous over the entire corner or edge roof zones. Prior to the panel installation, two rows of 3/8" bead of adhesive are field applied along the length of the strap.

Sidelap Adhesive:	Schnee-Morehead SM7108 Permathane adhesive
Test Standards:	Roof assembly tested in accordance with UL580-94 (Rev 98) 'Uplift Resistance of Roof Assemblies' & UL1897-98 'Uplift Tests for Roof Covering Systems' or TAS 125-03 'Standard Requirements for Metal Roofing Systems'.
Test Equivalency:	The test procedures in UL 580-94 comply with test procedures prescribed in UL 580-06. The test procedures in UL 1897-98 comply with test procedures prescribed in UL 1897-12.
Code Compliance:	The product described herein has demonstrated compliance with FBC 2020 Section 1507.4.
Product Limitations:	Design wind loads shall be determined for each project in accordance with FBC 2020 Section 1609 or ASCE 7-16 using allowable stress design. The maximum clip spacing listed herein shall not be exceeded. The design pressure for reduced clip spacing may be computed using rational analysis prepared by a Florida Professional Engineer or based on Metal Sales load span table. This evaluation report is not applicable in High Velocity Hurricane Zone. Fire classification is not within scope of this Evaluation Report. Refer to FBC 2020 Section 1505 and current approved roofing materials directory or ASTM E108/UL790 report from an accredited laboratory for fire ratings of this product.
Supporting Documents:	TAS 125 Test Report Farabaugh Engineering and Testing Inc. Project No. T158-14, Reporting Date 4/17/14 UL580/UL1897 Test Reports Farabaugh Engineering and Testing Inc. Project No. T210-11, Reporting Date 5/31/11

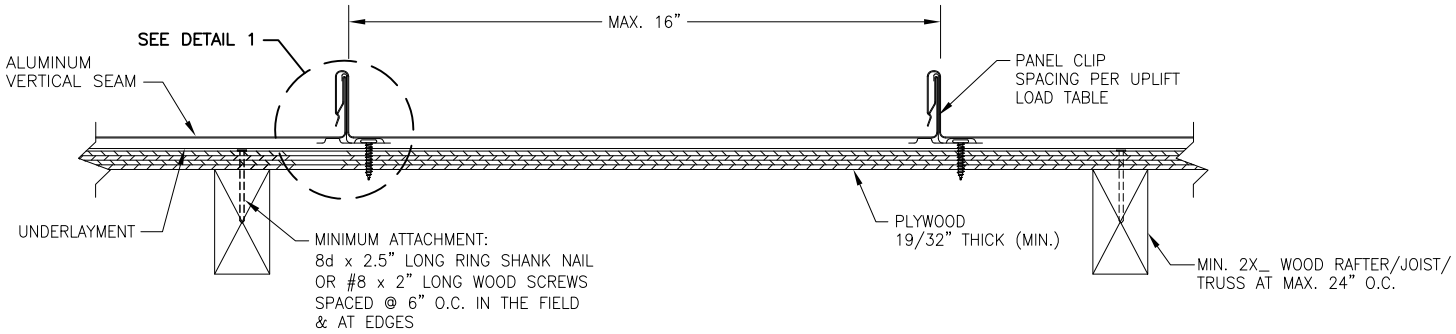

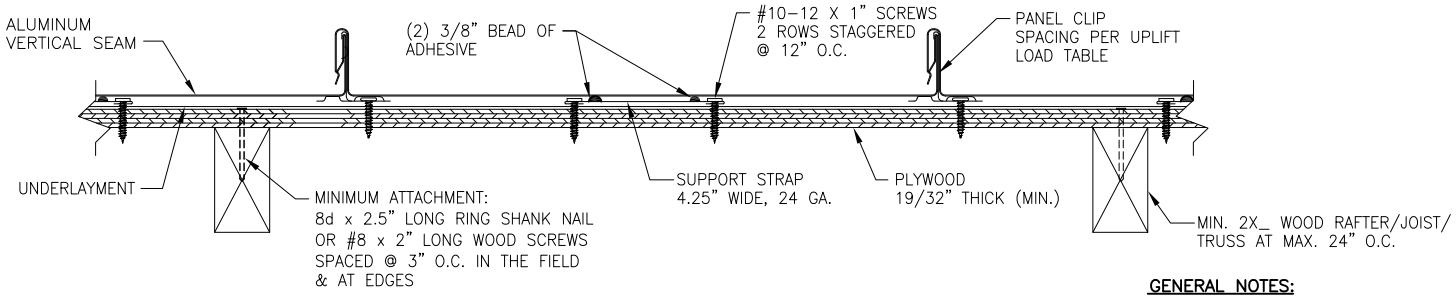

PANEL INSTALLATION X-SECTION

GENERAL NOTES:

1. ARCHITECTURAL STANDING SEAM ROOF PANEL HAS BEEN DESIGNED IN ACCORDANCE WITH THE FLORIDA BUILDING CODE (FBC).
2. ROOF PANELS SHALL BE MIN. NOMINAL 0.032" THICK ALUMINUM. MAXIMUM COVERING WIDTH OF PANEL = 16".
3. THE ROOF PANELS SHALL BE INSTALLED OVER SHEATHING & STRUCTURE AS SPECIFIED ON THIS DRAWING.
4. REQUIRED DESIGN WIND LOADS SHALL BE DETERMINED FOR EACH PROJECT. THIS PANEL SYSTEM MAY NOT BE INSTALLED WHEN THE REQUIRED DESIGN WIND LOADS ARE GREATER THAN THE ALLOWABLE WIND LOADS SPECIFIED ON THIS DRAWING.
5. ALL FASTENERS MUST BE IN ACCORDANCE WITH THIS DRAWING & THE FLORIDA BUILDING CODE. IF A DIFFERENCE OCCURS BETWEEN THE MINIMUM REQUIREMENTS OF THIS DRAWING & THE CODE, THE CODE SHALL CONTROL.
6. RAFTERS/JOISTS/TRUSSES MUST BE DESIGNED TO WITHSTAND WIND LOADS AS REQUIRED FOR EACH APPLICATION AND ARE THE RESPONSIBILITY OF OTHERS.

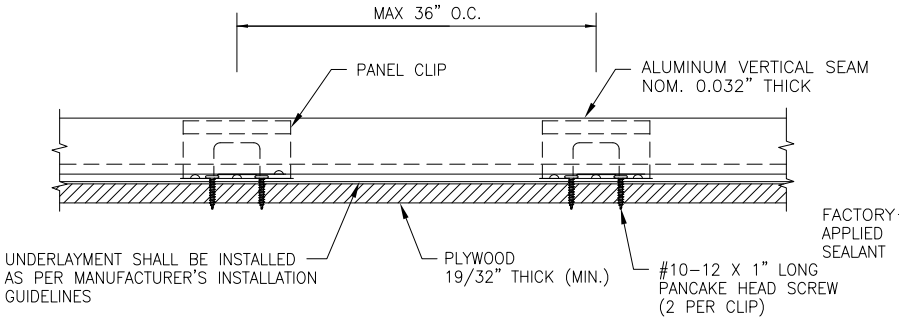

TYPICAL CLIP SPACING

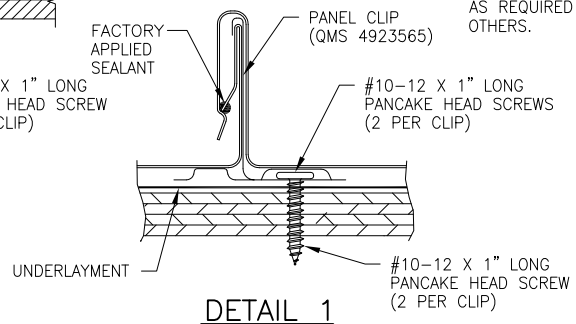

DETAIL 1

DRAWN BY: B.S.	CHECKED BY: D.S.
PLOT:	DATE: 10/6/20

NO.	REVISION DESCRIPTION	BY	DATE

DRAWING TITLE: ALUMINUM VERTICAL SEAM PANEL

MANUFACTURER: METAL SALES MANUFACTURING CORP.
545 SOUTH 3RD ST., SUITE 200
LOUISVILLE, KY 40202
502-855-4300

CONSULTANTS: BALA SOCKALINGAM, PH.D., P.E.
1216 N LANSING AVE, SUITE C
TULSA, OK 74106
PHONE: 918-492-5992 FAX: 866-366-1543

DRAWING NO. 2397-6 REV.

PAGE NO. 1 OF 1

METAL SALES MANUFACTURING CORPORATION
Aluminum Vertical Seam Uplift Loads
(Min. Nominal 0.032" thick)

Description	Fastener Spacing along Panel Length (in)	Allowable Uplift Load (psf)
Coverage width: 16"	**12**	**100.2**
	14	95.3
Clip: QMS 4923565	16	90.4
	18	83.1
	20	74.8
Clip Fastener: (2) #10-12 x 1" long pancake head screws	22	68.0
	24	62.3
	26	57.5
	28	53.4
	30	49.9
	32	46.7
	34	44.0
	36	**41.6**
With Support Strap	**12**	**162.0**

Notes:

1. The bold numbers indicate design loads calculated from test data with safety factor of 2.
2. Panels must be installed as per Evaluation Report FL 14645.6 and Metal Sales current installation procedure.
3. Three or more spans condition.
4. Optional wood purlins must be spaced same as panel fastener spacing along the panel length.

BALA SOCKALINGAM
LICENSE
No 62240
STATE OF FLORIDA
PROFESSIONAL ENGINEER

10.7.2020

1216 N Lansing Ave., Suite C
Tulsa, Ok 74106
918 492 5992

Bala Sockalingam, Ph.D., P.E.
FL 62240