TABLE OF CONTENTS

Product	Page No.
Panel Information	
TL-17 Panel Profiles	PF/I-2
TL-17 Panel Overview	PF/I-2
TL-17A Panel Profiles	PF/I-2
TL-17A Panel Overview	PF/I-2
TL-19A Panel Profiles	PF/I-3
TL-19A Panel Overview	PF/I-3
TL-21 Panel Profiles	PF/I-3
TL-21 Panel Overview	PF/I-3
Flashing Profiles	
Coping	PF/I-4
Outside Corner	PF/I-4
Inside Corner	PF/I-4
Custom Sill/Head	PF/I-4
Custom Sill to Soffit	PF/I-4
Custom Soffit Cleat	PF/I-4
Custom Jamb	PF/I-4
Head/Jamb Cover	PF/I-4
Custom Head Channel	PF/I-4
Custom Base	PF/I-4
Custom Z-Closure	PF/I-4
Soffit Panel Miter Trim	PF/I-4
Accessory Profiles	
Universal Closure	PF/I-5
Tape Sealant	PF/I-5
Touch-Up Paint	PF/I-5
Testing Information	
TL-17 Section Properties and General Info	PF/I-6
TL-21 Section Properties and General Info	PF/I-7
Design/Installation Considerations	
Fastener Installation Technique	PF/I-8
Condition of Substructure	PF/I-8
TL-17 Fastening Pattern	PF/I-9
TL-17A Fastening Pattern	PF/I-9
TL-19A Fastening Pattern	PF/I-10
TL-21 Fastening Pattern	PF/I-10
Detail Conditions	
Coping Detail	PF/I-11
Outside Corner Detail	PF/I-11
Inside Corner Detail	PF/I-12
Sill/Head Detail	PF/I-12
Sill to Soffit Detail (+ option)	PF/I-13
Soffit Jamb Detail	PF/I-13
Soffit Miter Trim Detail	PF/I-14
Jamb Detail	PF/I-14
Head Detail	PF/I-15
Base Detail	PF/I-15
Notes	
Notes	PF/I-16

© Metal Sales Manufacturing Corporation/ Subject to change without notice/ Effective Date 6/21

TL-17 AND TL-17A PANEL OVERVIEW

TL-17 PANEL PROFILE

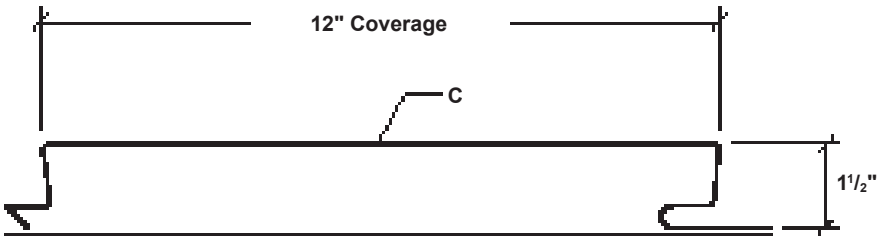

TL-17A PANEL PROFILE

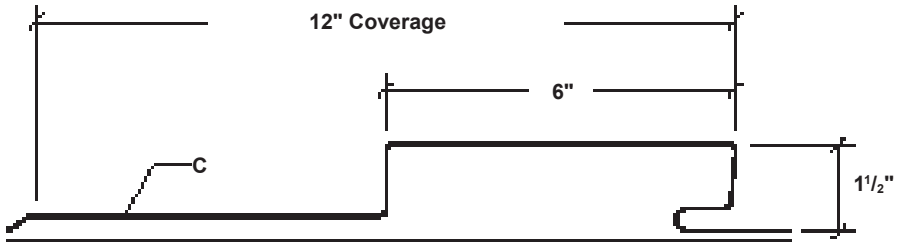

SUBSTRATE

Flush Faced panels are designed to be utilized over open structural framing, but can easily be used with a solid substrate. The recommended substrate is 5/8" plywood with a 30 pound felt moisture barrier. To avoid panel distortion, use a properly aligned and uniform substructure.

COVERAGE

Flush Faced panels are available in 12" width and 1 1/2" height.

LENGTH

Lengths under 5'-0" are available with some cutting restrictions. The maximum panel length is 30'-0" (see PGI-2 and PGI-3 for locations).

AVAILABILITY

Panels are available in 24 through 18 gauge. Minimum quantities may apply.
Custom capabilities include:
-Perforated panels for wind screens and liner panels.

APPLICATION

Soffit, Fascia, Wall and Liner

FASTENING SYSTEM

Direct Fastened (concealed)

FASTENERS

The fastener selection guide should be consulted for choosing proper fasteners for specific applications. Quantity and type of fastener must meet necessary loading and code requirements (see PGI-12 through PGI-14). Adhesive may be necessary in the sidelap to prevent disengagement.

MATERIALS

24 and 22 guage: Steel Grade 50, AZ50 or AZ55 per ASTM A 792
20 and 18 guage: Steel Grade 33, G90 per ASTM A 653
Optional material: stainless steel, copper and aluminum

FINISH

- *Acrylic Coated Galvalume® (ACG): AZ55 per ASTM A 792
- Prepainted Galvalume®: AZ50 per ASTM A 792
- MS Colorfast45®
- **PVDF
- Multi-Pass Kynar 500®
- Marbilique
- Plastisol
- Polyester

* Differential appearance of Acrylic Coated Galvalume® roofing materials is not a cause for rejection.
** Meets both Kynar 500® and Hylar 5000® specifications.

© Metal Sales Manufacturing Corporation/ Subject to change without notice/ Effective Date 6/21
800.406.7387 (Corporate Office) • metalsales.us.com

TL-19A AND TL-21 PANEL OVERVIEW

TL-19A PANEL PROFILE

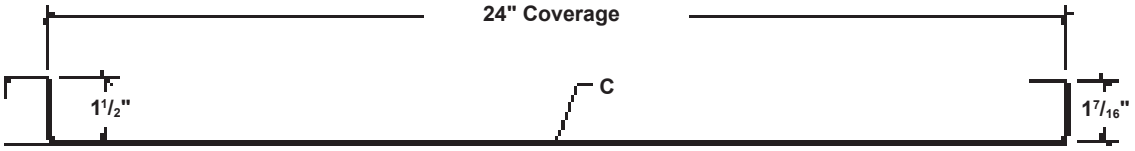

TL-21 PANEL PROFILE

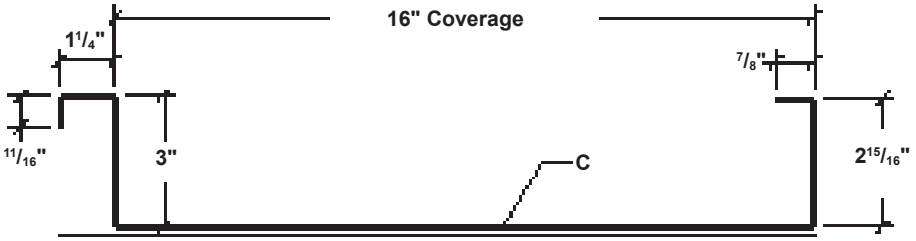

SUBSTRATE

Liner panels are designed to be utilized over open structural framing, but can easily be used with a solid substrate. The recommended substrate is 5/8" plywood with a 30 pound felt moisture barrier. To avoid panel distortion, use a properly aligned and uniform substructure.

COVERAGE

Liner panels are available in 16" (TL-19A) or 24" (TL-21) width and 1 7/16" (TL-19A) or 2 15/16" (TL-21) height.

LENGTH

Lengths under 5'-0" are available with some cutting restrictions. The maximum panel length is 32'-0" (see PGI-2 and PGI-3 for locations).

AVAILABILITY

Panels are available in 24 through 18 gauge. Minimum quantities may apply.
Custom capabilities include:
-Perforated panels for wind screens and liner panels.

APPLICATION

Liner

FASTENING SYSTEM

Direct Fastened (exposed)

FASTENERS

The fastener selection guide should be consulted for choosing proper fasteners for specific applications. Quantity and type of fastener must meet necessary loading and code requirements (see PGI-12 through PGI-14).

MATERIALS

24 and 22 guage: Steel Grade 50, AZ50 or AZ55 per ASTM A 792
20 and 18 guage: Steel Grade 33, G90 per ASTM A 653
Optional material: stainless steel, copper and aluminum

FINISH

- *Acrylic Coated Galvalume® (ACG): AZ55 per ASTM A 792
- Prepainted Galvalume®: AZ50 per ASTM A 792
- MS Colorfast45®
- **PVDF
- Multi-Pass Kynar 500®
- Marbilique
- Plastisol
- Polyester

* Differential appearance of Acrylic Coated Galvalume® roofing materials is not a cause for rejection.
** Meets both Kynar 500® and Hylar 5000® specifications.

© Metal Sales Manufacturing Corporation/ Subject to change without notice/ Effective Date 6/21

COPING

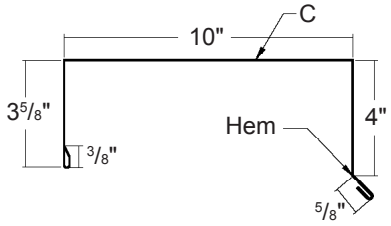

Length 10'-0"

OUTSIDE CORNER

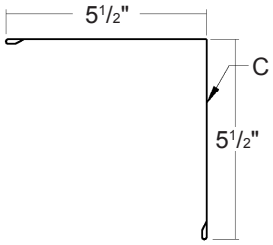

Length 10'-0"

INSIDE CORNER

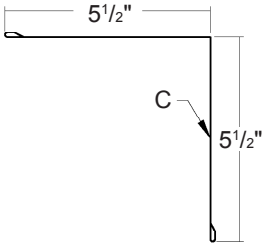

Length 10'-0"

CUSTOM SILL/HEAD

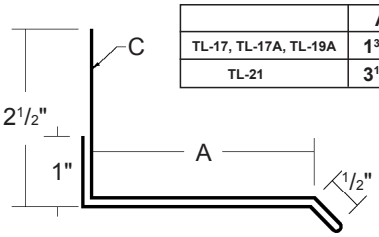

	A
TL-17, TL-17A, TL-19A	1 3/4"
TL-21	3 1/4"

Length 10'-0"

CUSTOM SILL TO SOFFIT

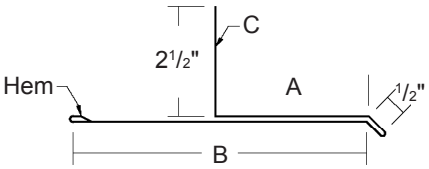

	A	B
TL-17, TL-17A, TL-19A	1 3/4"	4"
TL-21	3 1/4"	5 1/2"

Length 10'-0"

CUSTOM SOFFIT CLEAT

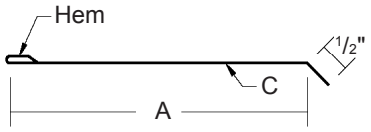

	A
TL-17, TL-17A, TL-19A	5"
TL-21	5 3/4"

Length 10'-0"

CUSTOM JAMB

	A
TL-17, TL-17A, TL-19A	1 3/4"
TL-21	3 1/4"

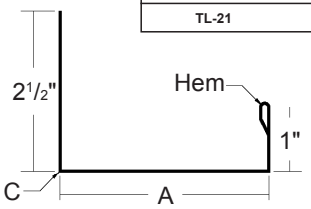

Length 10'-0"

HEAD/JAMB COVER

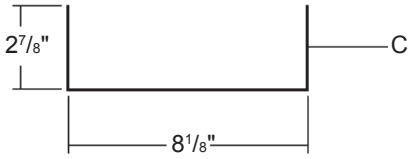

Length 10'-0"

CUSTOM HEAD CHANNEL

	A
TL-17, TL-17A, TL-19A	1 1/2"
TL-21	3"

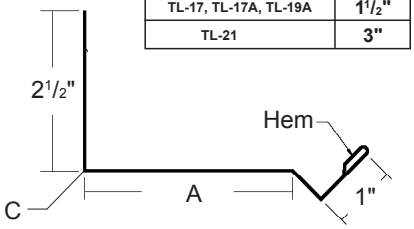

Length 10'-0"

CUSTOM BASE

	A
TL-17, TL-17A, TL-19A	1 3/4"
TL-21	3 1/4"

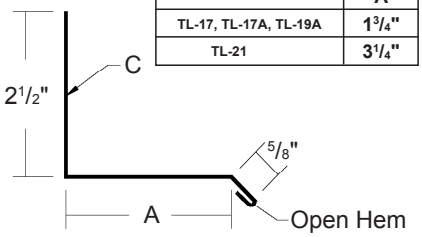

Length 10'-0"

CUSTOM Z-CLOSURE

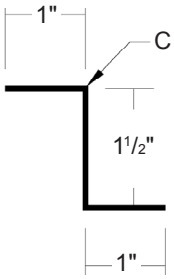

Length 10'-0"

SOFFIT PANEL MITER TRIM

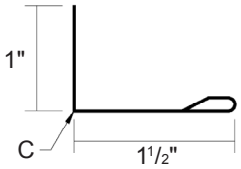

Length 10'-0"

© Metal Sales Manufacturing Corporation/ Subject to change without notice/ Effective Date 6/21
800.406.7387 (Corporate Office) • metalsales.us.com
metal sales manufacturing corporation

UNIVERSAL CLOSURE

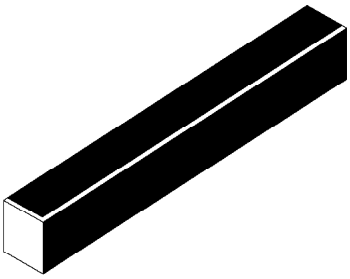

1" x 1½" x 50' Polyethylene Foam
1" x 1½" x 10' Polyethylene Foam

TAPE SEALANT

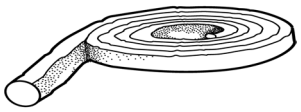

3/8" X 3/32" X 50'
Single Bead Tape Sealant
Butyl - Gray

TOUCH-UP PAINT

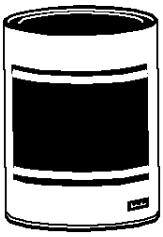

Available in 2 oz Bottles
PVDF / MS Colorfast45®

© Metal Sales Manufacturing Corporation/ Subject to change without notice/ Effective Date 6/21

TL-17 SECTION PROPERTIES AND LOAD TABLES

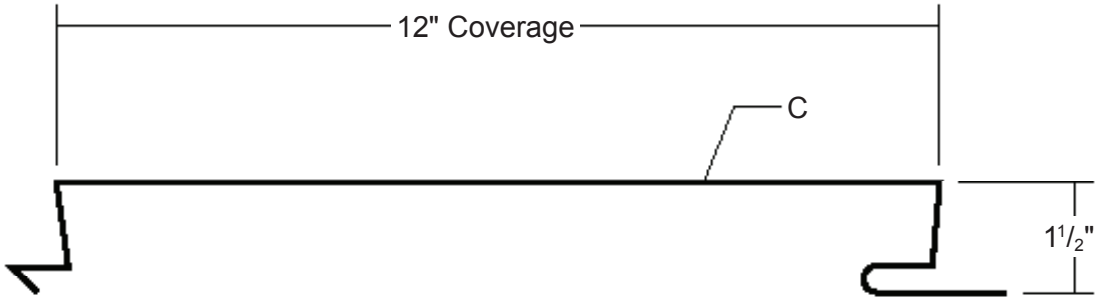

SECTION PROPERTIES								ALLOWABLE UNIFORM LOADS, psf For various fastener spacings											
Ga	Width in	Yield ksi	Weight psf	Top In Compression		Bottom In Compression		Inward Load						Outward Load					
				Ixx in⁴/ft	Sxx in³/ft	Ixx in⁴/ft	Sxx in³/ft	2'	3'	4'	5'	6'	8'	2'	3'	4'	5'	6'	8'
24	12	50	1.34	0.0495	0.0562	0.0746	0.0597	50	45	39	34	28	18	81	71	62	51	36	20
22	12	50	1.76	0.0714	0.0847	0.1014	0.0811	63	56	50	44	38	25	83	74	65	56	48	30
20	12	33	2.15	0.1017	0.1314	0.1328	0.1071	63	56	50	44	38	25	83	74	65	56	48	30
18	12	33	2.82	0.1530	0.1851	0.1840	0.1486	63	56	50	44	38	25	83	74	65	56	48	30

1. Theoretical section properties have been calculated per AISI 2016 'North American Specification for the Design of Cold-Formed Steel Structural Members'. Ixx and Sxx are effective section properties for deflection and bending.
2. Allowable loads are calculated in accordance with AISI 2016 specifications considering bending, shear, combined bending, shear and deflection and panel testing per ASTM E 1592 over 16 ga support and field-applied adhesive as shown above. Allowable loads consider the 3 or more equal spans condition. Allowable loads do not address web crippling, fasteners or support material. Panel weight is not considered.
3. Deflection consideration is limited by a maximum deflection ratio of L/180 of span.
4. Allowable loads do not include a 1/3 stress increase for wind.

ATTACHMENT DETAIL

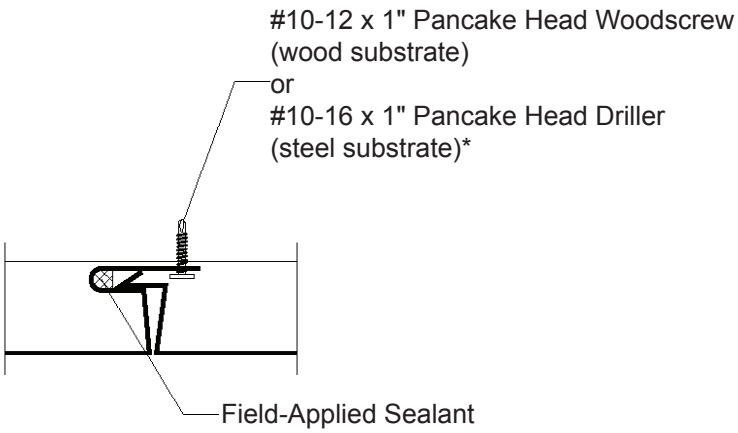

FASTENING PATTERNS

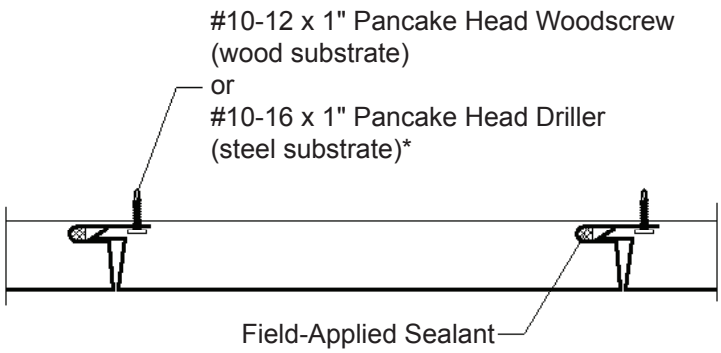

*Pre-drilling into thicker steel may be required.

GENERAL INFORMATION

▶ **Substructure**
TL-17 panels are designed to be utilized over open structural framing or a solid substrate.

▶ **Coverage**
TL-17 panels are available in a 1½" depth with a 12" width coverage.

▶ **Length**
Minimum factory cut length is 5'-0".
Maximum available panel length is 30'-0".

▶ **Fasteners**
The fastener selection guide should be consulted for choosing the proper fastener for specific applications. Quantity and type of fastener must meet necessary loading and code requirements.
NOTE: All panels are subject to surface distortion due to improperly applied fasteners. Overdriven fasteners will cause stress and induce oil canning across the face of the panel at or near the point of attachment.

▶ **Availability**
Finishes: PVDF (Kynar 500®) standard; optional: multi-pass Kynar 500®, Marblique, Plastisol and Polyester
Gauges: 24ga, 22ga, 20ga and 18ga

© Metal Sales Manufacturing Corporation/ Subject to change without notice/ Effective Date 6/21
800.406.7387 (Corporate Office) • metalsales.us.com

TL-21 SECTION PROPERTIES AND LOAD TABLES

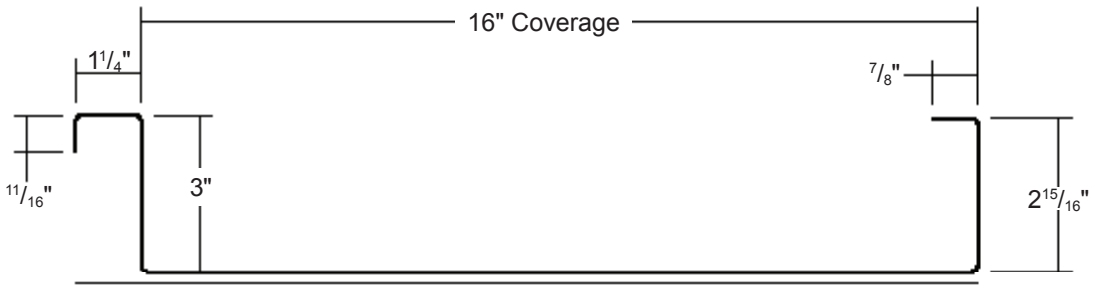

NOTE: Either side of panel can be painted, please specify

SECTION PROPERTIES								ALLOWABLE UNIFORM LOADS, psf For various fastener spacings											
Ga	Width in	Yield ksi	Weight psf	Top in Compression		Bottom in Compression		Inward Load						Outward Load					
				Ixx in^4/ft	Sxx in^3/ft	Ixx in^4/ft	Sxx in^3/ft	4'	5'	6'	7'	8'	9'	4'	5'	6'	7'	8'	9'
24	16	50	1.38	0.3158	0.1244	0.1883	0.1100	130	89	64	49	38	30	141	97	71	54	42	34
22	16	50	1.82	0.4838	0.1972	0.2708	0.1667	219	145	103	77	59	47	250	168	120	89	69	55
20	16	33	2.22	0.7050	0.3005	0.3720	0.2447	223	145	102	76	58	46	266	175	124	92	71	56
18	16	33	2.93	0.9488	0.4070	0.5438	0.3431	312	204	143	106	81	65	363	238	168	125	96	76

1. Theoretical section properties have been calculated per AISI 2016 'North American Specification for the Design of Cold-Formed Steel Structural Members'. Ixx and Sxx are effective section properties for deflection and bending.
2. Allowable loads are calculated in accordance with AISI 2016 specifications considering bending, shear, combined bending and shear and deflection. Allowable loads consider the 3 or more equal span condition. Allowable loads do not address web crippling, fasteners, support material or load testing. Panel weight is not considered.
3. Deflection consideration is limited by a maximum deflection ratio of L/180 of span.
4. Allowable loads do not include a 1/3 stress increase for wind.

ATTACHMENT DETAIL

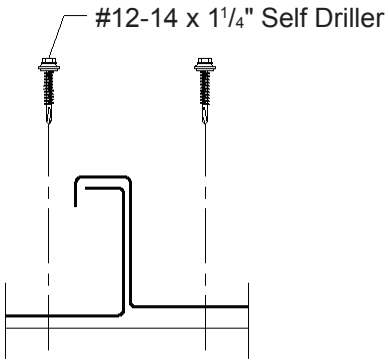

FASTENING PATTERN

Ends and Field of Panel

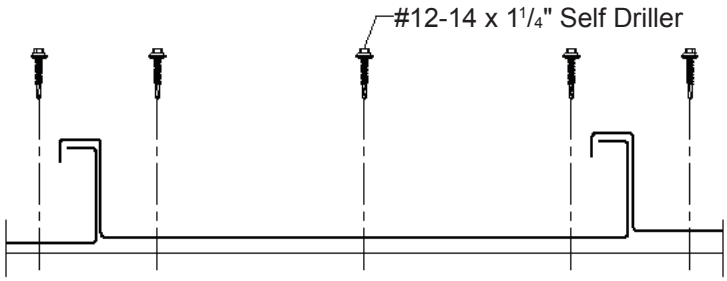

GENERAL INFORMATION

▶ Substructure
TL-21 Panels are designed to be utilized over open structural framing or a solid substrate.

▶ Coverage
TL-21 Panels are available in a 3" depth with a 16" width coverage.

▶ Length
Minimum factory cut length is 5'-0".
Maximum available panel length is 32'-0".

▶ Fasteners
The fastener selection guide should be consulted for choosing the proper fastener for specific applications. Quantity and type of fastener must meet necessary loading and code requirements.
NOTE: All panels are subject to surface distortion due to improperly applied fasteners. Overdriven fasteners will cause stress and induce oil canning across the face of the panel at or near the point of attachment.

▶ Availability
*Finishes: PVDF (*Kynar 500®) standard; optional: multi-pass Kynar 500®, Marblique, Plastisol, Polyester and MS Colorfast45® (SMP)
Gauges: 24ga, 22ga, 20ga and 18ga

© Metal Sales Manufacturing Corporation/ Subject to change without notice/ Effective Date 6/21

FASTENER INSTALLATION TECHNIQUE

Recommended Tool Type - Use depth locating nose or adjustable clutch on screw gun to prevent overdrilling and strip out. **Do not use impact tools or runners.**

Seating the washer - Apply sufficient torque to seat the washer - do not overdrive the fastener.

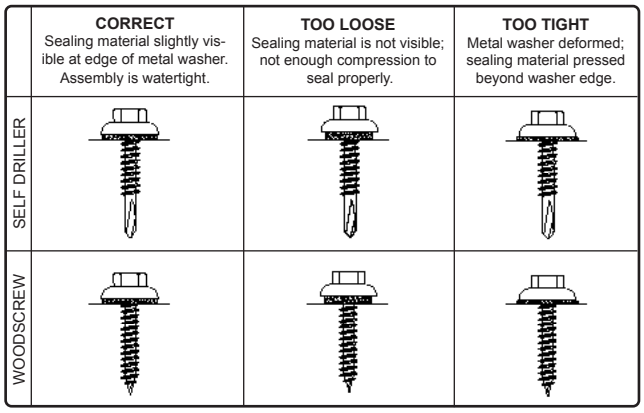

To prevent wobbling - Make sure fastener head is completely engaged in the socket. If the head does not go all the way in the socket - tap the magnet deeper into the socket to allow full head engagement. Metal chips will build up from drilling and should be removed from time to time.

Protect drill point - Push only hard enough on the screw gun to engage clutch. This prevents excess friction and burn out of the drill point. Correct pressure will allow screw to drill and tap without binding.

Drilling through sheet and insulation - Ease up on pressure when drilling through insulation to avoid striking the purlin or girt with the point - apply more pressure after drill point contacts purlin or girt.

Drilling through purlin overlaps - Drilling through lapped purlins requires extra care. Excessive voids between purlins sometimes damages drill points and two self-drillers might be necessary to complete the operation. It is sometimes advantageous to predrill.

CONDITION OF SUBSTRUCTURE

Whether over solid substrate or open structural framing, panel distortion may occur if not applied over properly aligned and uniform substructure.

The installer should check the roof deck for squareness before installing Flush Face / Interior Liner panels. Several methods can be used to verify squareness of the structure for proper installation of the panels.

METHOD "A" - One method for checking the roof for squareness is to measure diagonally across one slope of the roof from similar points at the ridge and eave and obtain the same dimension.

METHOD "B" - The 3-4-5 triangle system may also be used. To use this system measure a point from the corner along the edge of the roof at a module of three (3). Measure a point from the same corner along another edge at a module of four (4). Then by measuring diagonally between the two points established, the dimension should be exactly a module of five (5) to have a square corner. Multiple uses of this system may be required to determine building squareness. If the endwall cannot be made square, the roof system cannot be installed as shown in these instructions.

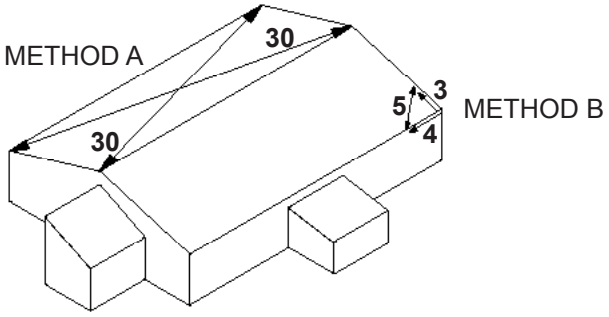

© Metal Sales Manufacturing Corporation/ Subject to change without notice/ Effective Date 6/21
800.406.7387 (Corporate Office) • metalsales.us.com

TL-17 FASTENING PATTERNS

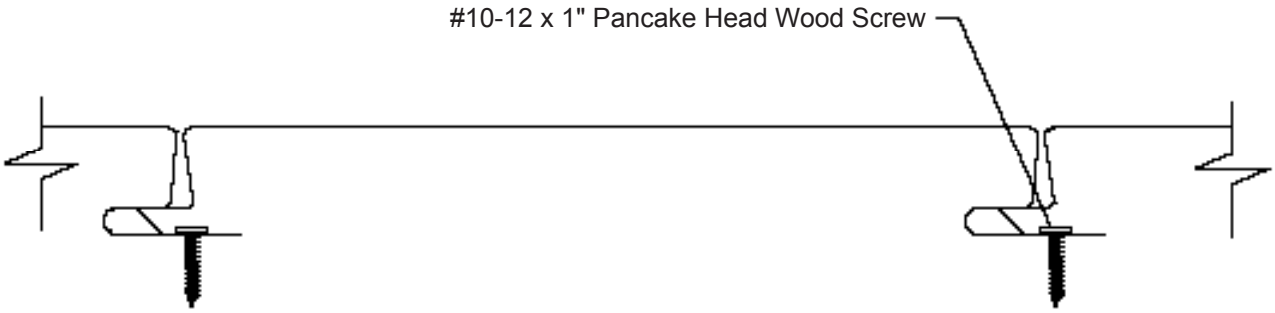

TL-17A FASTENING PATTERNS

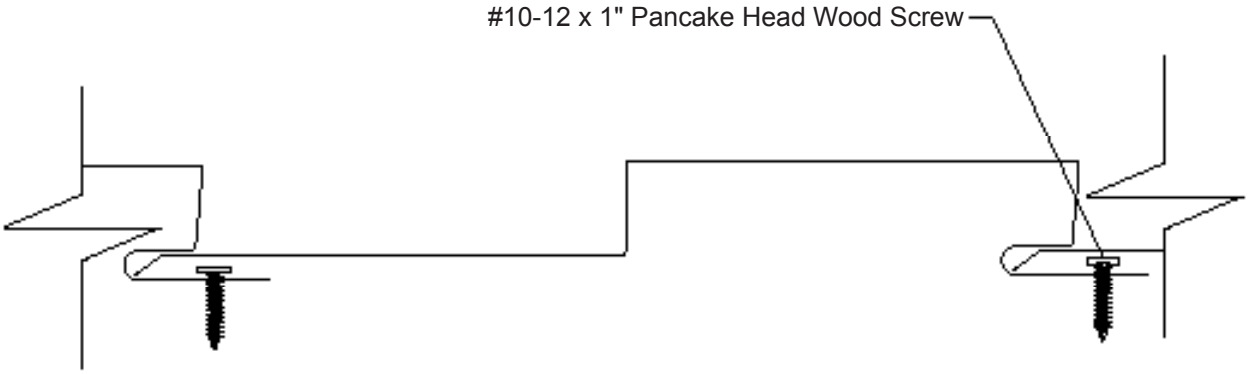

© Metal Sales Manufacturing Corporation/ Subject to change without notice/ Effective Date 6/21

TL-19A FASTENING PATTERNS

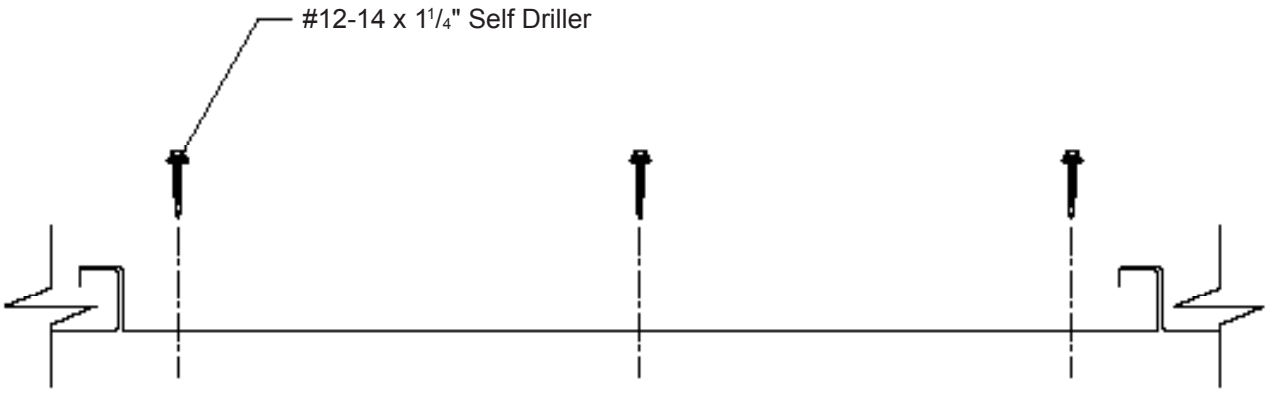

TL-21 FASTENING PATTERNS

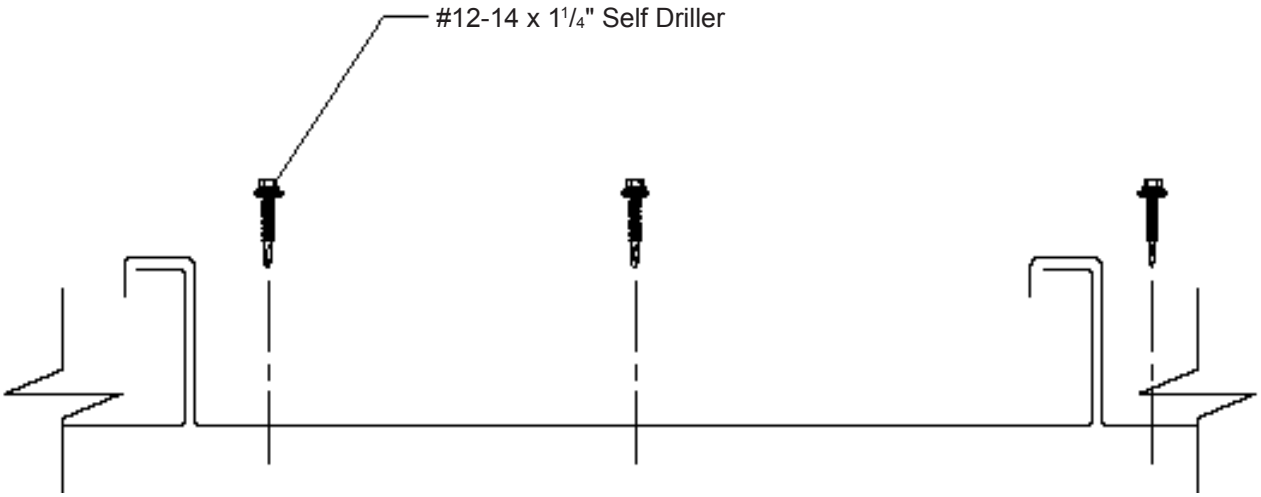

© Metal Sales Manufacturing Corporation/ Subject to change without notice/ Effective Date 6/21
800.406.7387 (Corporate Office) • metalsales.us.com

Flush Face / Interior Liner Series — Coping Detail

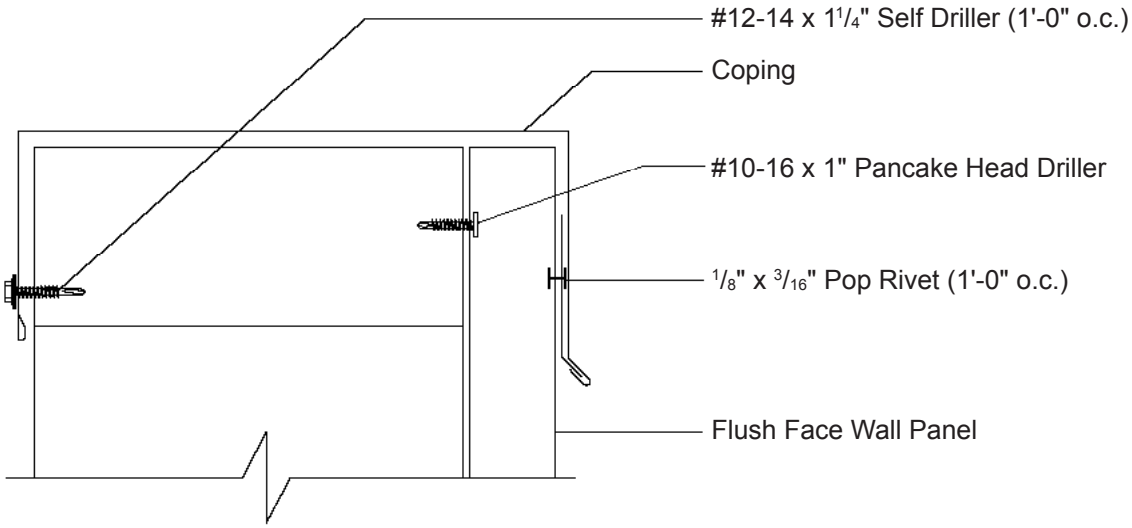

Flush Face / Interior Liner Series — Outside Corner Detail

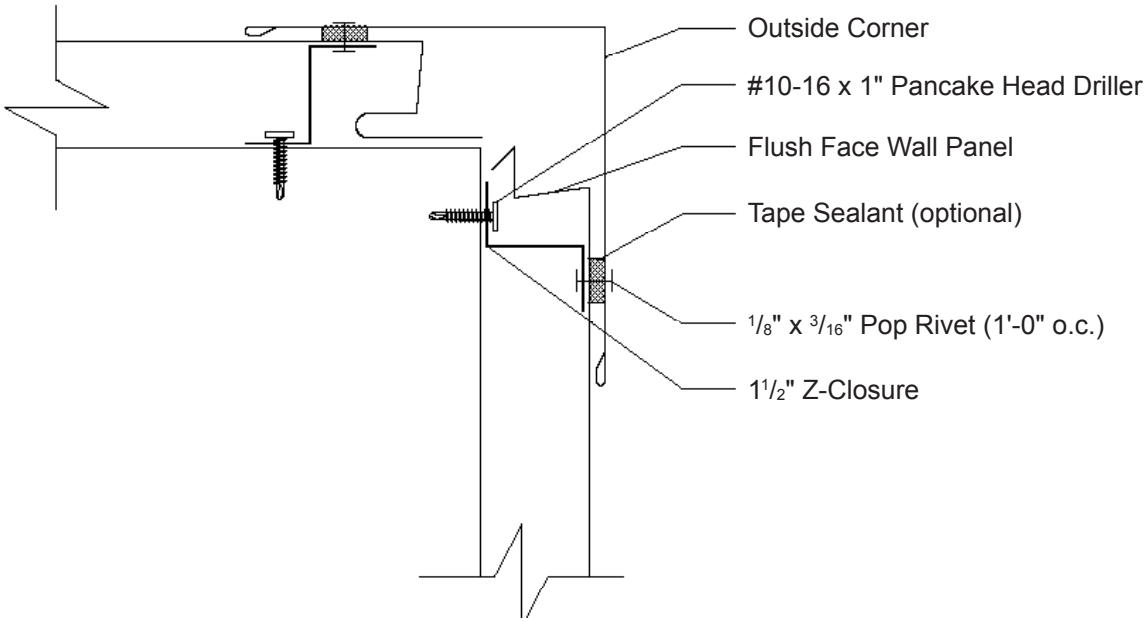

© Metal Sales Manufacturing Corporation/ Subject to change without notice/ Effective Date 6/21

Flush Face / Interior Liner Series — Inside Corner Detail

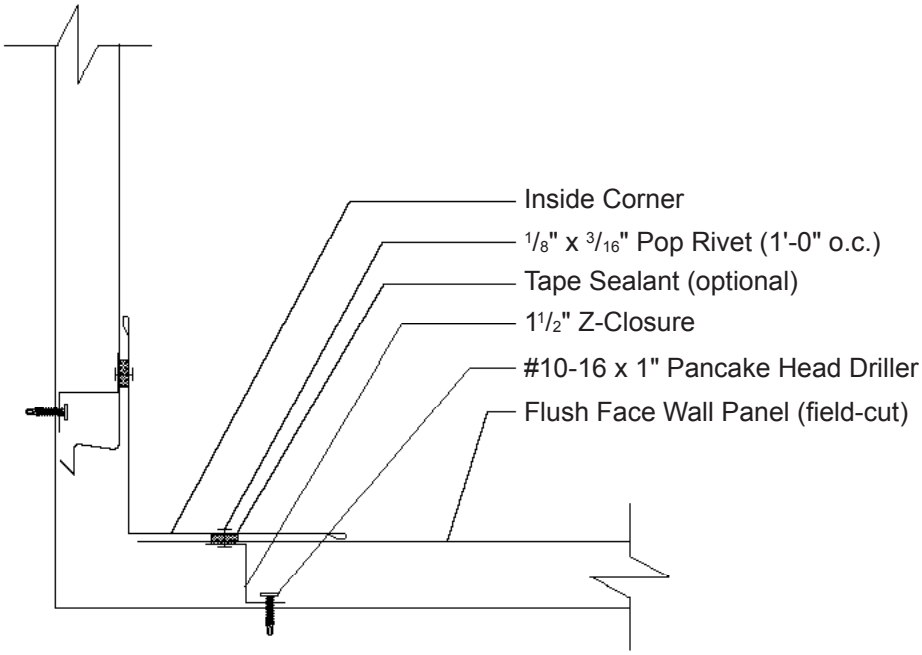

Flush Face / Interior Liner Series — Sill/Head Detail

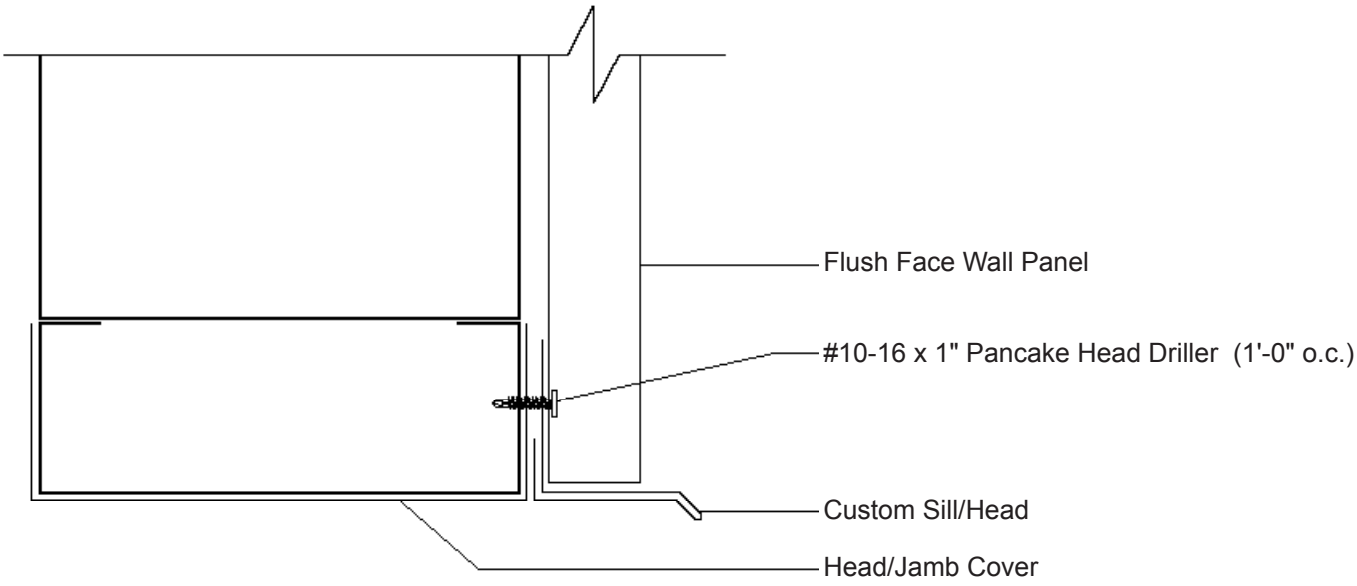

© Metal Sales Manufacturing Corporation/ Subject to change without notice/ Effective Date 6/21
800.406.7387 (Corporate Office) • metalsales.us.com

Flush Face / Interior Liner Series — Sill to Soffit Detail

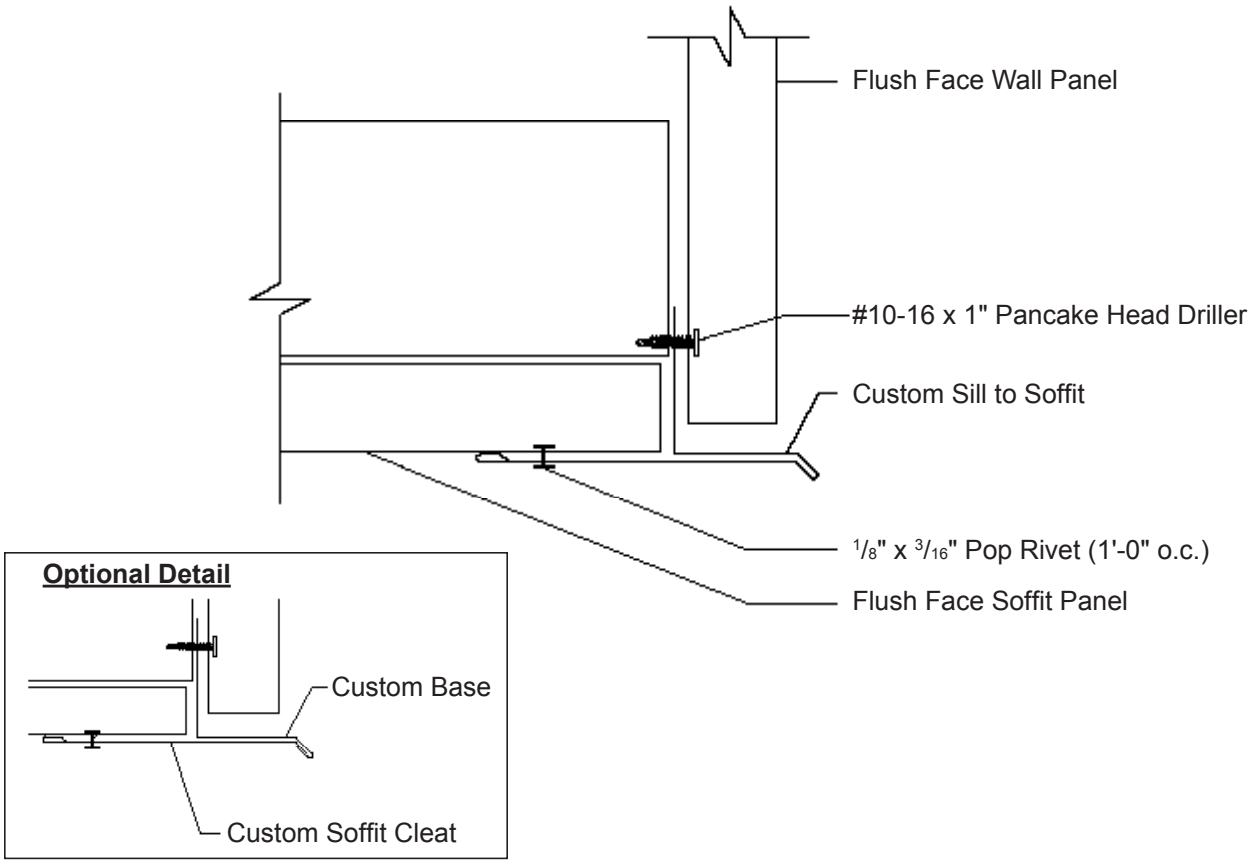

Flush Face / Interior Liner Series — Soffit Jamb Detail

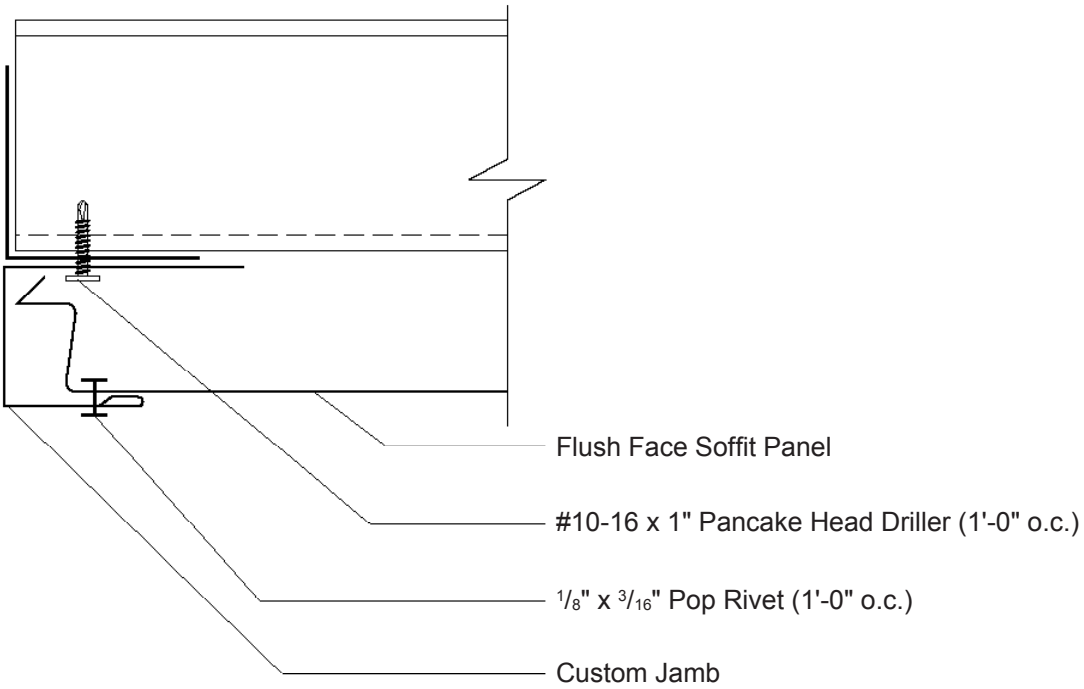

Flush Face / Interior Liner Series — Soffit Miter Trim Detail

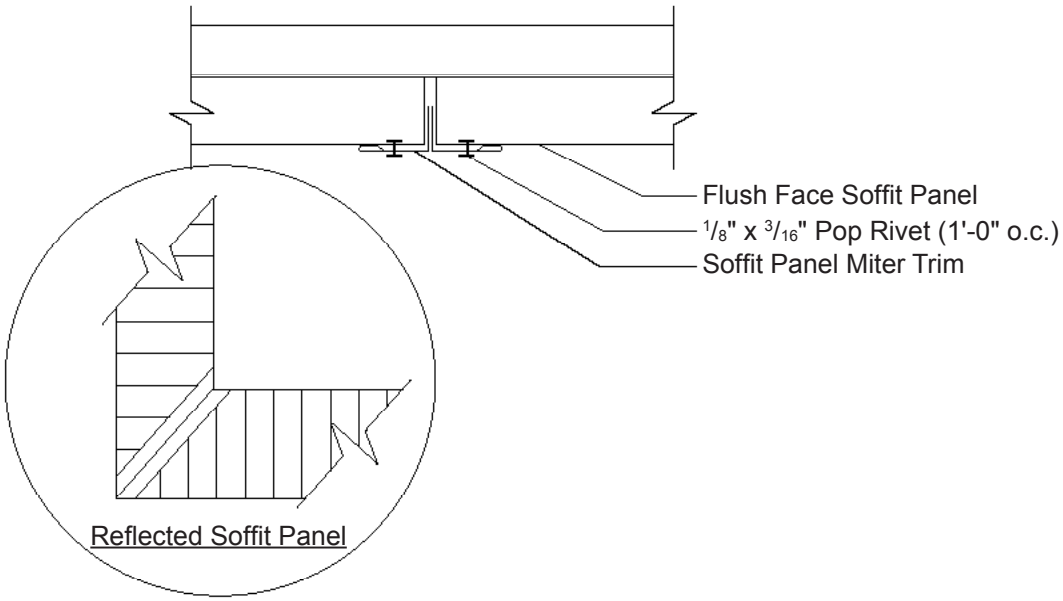

Flush Face / Interior Liner Series — Jamb Detail

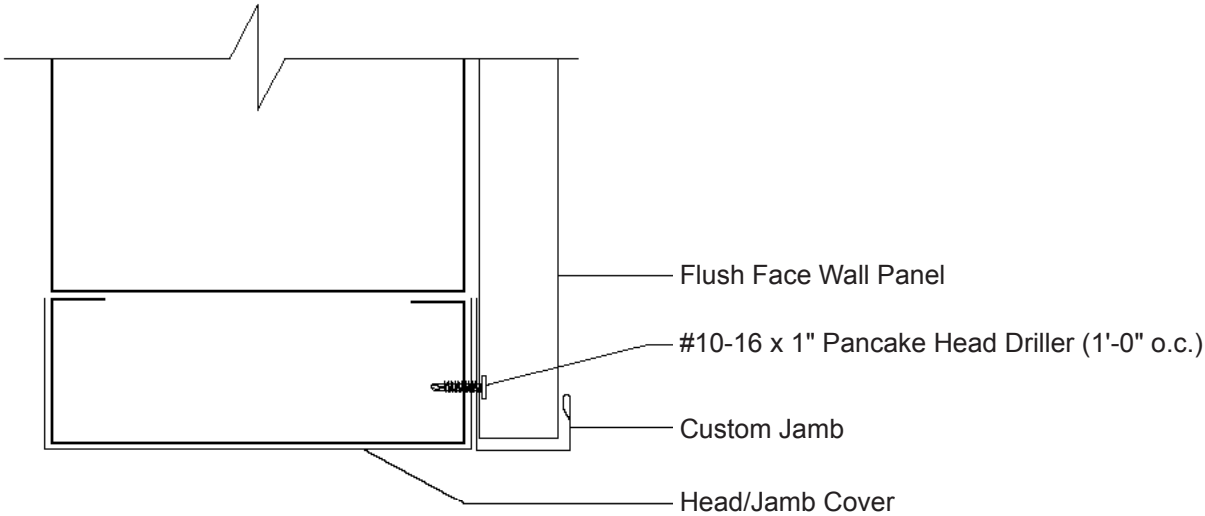

© Metal Sales Manufacturing Corporation/ Subject to change without notice/ Effective Date 6/21
800.406.7387 (Corporate Office) • metalsales.us.com

Flush Face / Interior Liner Series Head Detail

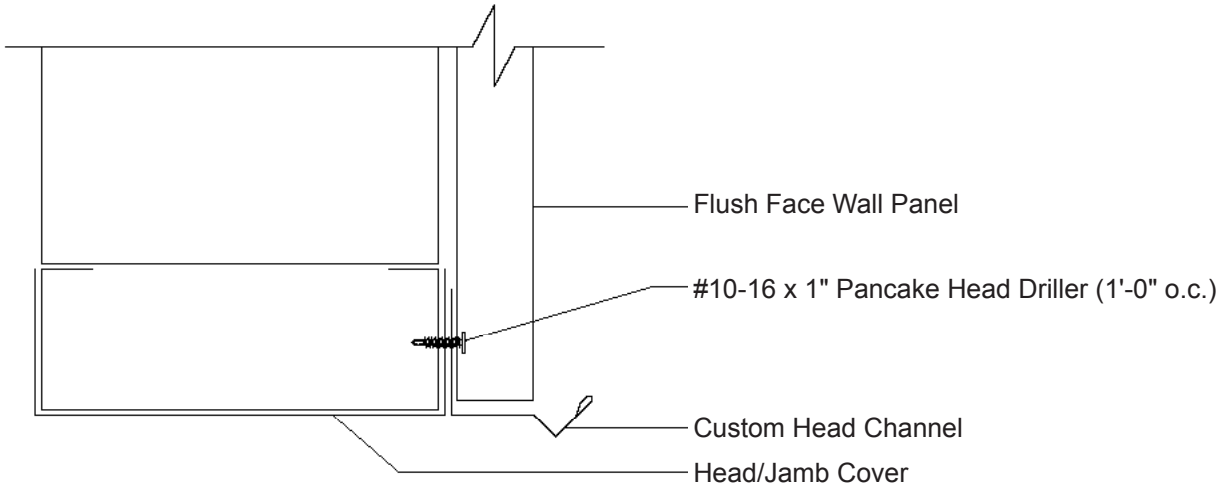

Flush Face / Interior Liner Series Base Detail

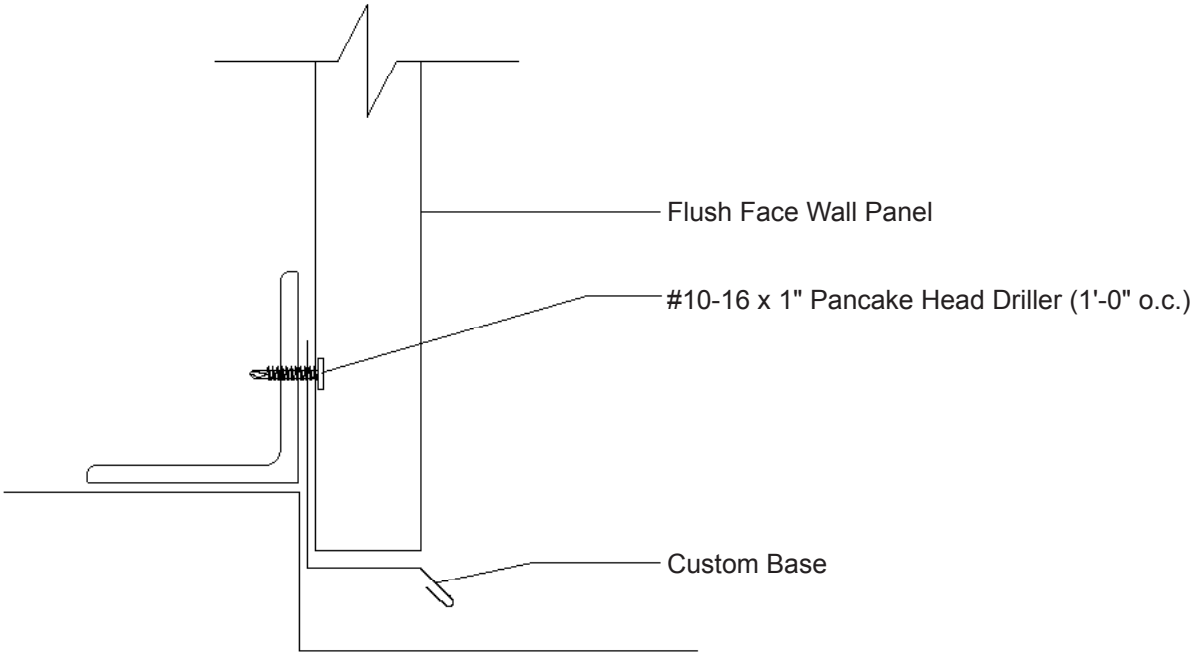

© Metal Sales Manufacturing Corporation/ Subject to change without notice/ Effective Date 6/21

NOTES

© Metal Sales Manufacturing Corporation/ Subject to change without notice/ Effective Date 6/21
800.406.7387 (Corporate Office) • metalsales.us.com

metal sales manufacturing corporation