EVALUATION REPORT OF
METAL SALES MANUFACTURING CORPORATION
'24 GA., 7/8" CORRUGATED PANEL'

FLORIDA BUILDING CODE 7TH EDITION (2020)
FLORIDA PRODUCT APPROVAL
FL 10999.1-R4
STRUCTURAL COMPONENTS
ROOF DECK

Prepared For:
Metal Sales Manufacturing Corporation
545 South 3rd Street, Suite 200
Louisville, KY 40202
Telephone: (502) 855-4300
Fax: (502) 855-4200

Prepared By:
Bala Sockalingam, Ph.D., P.E.
Florida Professional Engineer #62240
1216 N Lansing Ave., Suite C
Tulsa, OK 74106
Telephone: (918) 492-5992
FAX: (866) 366-1543

This report consists of
Evaluation Report (3 Pages including cover)
Installation Details (1 Page)
Load Span Table (1 Page)

Report No. C2394-1
Date: 9.28.2020

BALA SOCKALINGAM
LICENSE
No 62240
STATE OF
FLORIDA
PROFESSIONAL ENGINEER

9.28.2020

Manufacturer:	Metal Sales Manufacturing Corporation
Product Name:	7/8" Corrugated
Panel Description:	32" wide coverage with (14) 7/8" high ribs spaced at 2.67" o.c.
Materials:	Min. 24 ga., 50 ksi steel. Galvanized coated steel (ASTM A653) or Galvalume coated steel (ASTM A792) or painted steel (ASTM A755). Corrosion resistant as per FBC 2020 Section 1507.4.3.
Support Description:	Min. 16 ga., 50 ksi steel section (Must be designed by others)
Slope:	1/2:12 or greater in accordance with FBC 2020 Section 1507.4.2. Requires applied lap sealant for roof slopes less than 3:12.
Design Uplift Pressure: (Factor of Safety = 2)	79.7 psf at support spacing of 60" o.c. 156.4 psf at support spacing of 24" o.c.
Panel Attachment:	#12-14 x 2" long self-drilling screws with washer at 8" o.c. across panel width. Fasteners are corrosion resistant as per FBC 2020 Section 1507.4.4.
Sidelap Attachment:	¼"-14 x 7/8" long self-drilling screws with washer at 12" o.c. Fasteners are corrosion resistant as per FBC 2020 Section 1507.4.4.
Test Standards:	Roof assembly tested in accordance with ASTM E1592-01 'Test Method for Structural Performance of Sheet Metal Roof and Siding Systems by Uniform Static Air Pressure Difference', FM 4470 Section 5.5 'Resistance to Foot Traffic'.
Test Equivalency:	The test procedure in ASTM E1592-01 comply with test procedure prescribed in ASTM E1592-05(2012). The test procedure in FM 4470 (1992) comply with test procedure prescribed in FM 4470 (2016) Section 4.6 'Resistance to Foot Traffic'.
Code Compliance:	The product described herein has demonstrated compliance with FBC 2020 Section 1507.4.
Product Limitations:	Design wind loads shall be determined for each project in accordance with FBC 2020 Section 1609 or ASCE 7-16 using allowable stress design. The maximum support spacing listed herein shall not be exceeded. The design uplift pressure for reduced support spacing may be computed using rational analysis prepared by a Florida Professional Engineer or based on Metal Sales load span table. This evaluation report is not applicable in High Velocity Hurricane Zone. Fire classification is not within scope of this Evaluation Report. Refer to

FBC 2020 Section 1505 and current approved roofing materials directory or ASTM E108/UL790 report from an accredited laboratory for fire ratings of this product.

Supporting Documents: ASTM E1592 Test Reports
Farabaugh Engineering and Testing Inc.
Project No. T162-09, Reporting Date 4/23/09

FM 4470 Test Report
ENCON Technology Inc.
C1653-1, Reporting Date 7/2/09

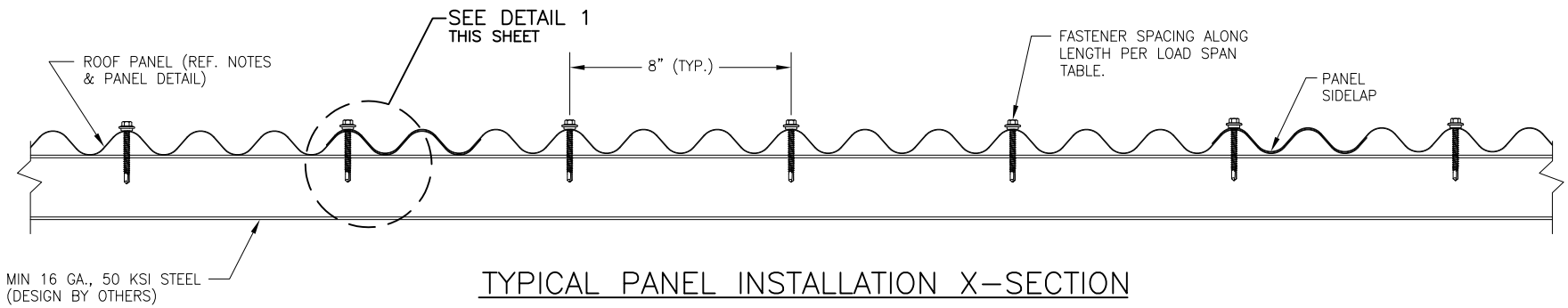

TYPICAL PANEL INSTALLATION X-SECTION

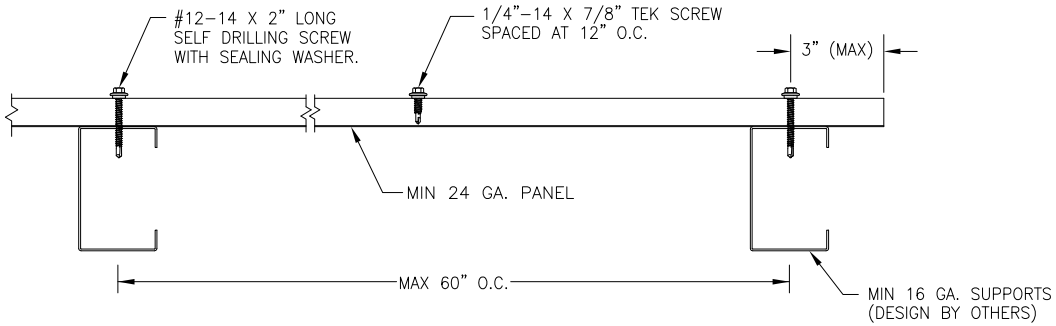

SECTION VIEW

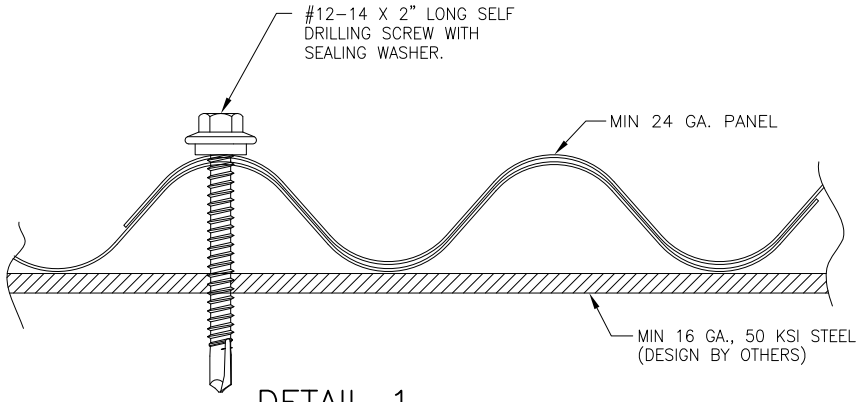

DETAIL 1

GENERAL NOTES:

1. STRUCTURAL ROOF PANEL HAS BEEN DESIGNED IN ACCORDANCE WITH THE FLORIDA BUILDING CODE (FBC).
2. ROOF PANELS ARE SHALL BE MIN. 24 GA. (0.022"). EFFECTIVE COVERING WIDTH OF PANEL = 32".
3. ROOF PANELS SHALL BE INSTALLED OVER STRUCTURE AS SPECIFIED ON THIS DRAWING.
4. REQUIRED DESIGN WIND LOADS SHALL BE DETERMINED FOR EACH PROJECT. THIS PANEL SYSTEM MAY NOT BE INSTALLED WHEN THE REQUIRED DESIGN WIND LOADS ARE GREATER THAN THE ALLOWABLE WIND LOADS SPECIFIED ON THIS DRAWING.
5. ALL FASTENERS MUST BE IN ACCORDANCE WITH THIS DRAWING & THE FLORIDA BUILDING CODE. IF A DIFFERENCE OCCURS BETWEEN THE MINIMUM REQUIREMENTS OF THIS DRAWING & THE CODE, THE CODE SHALL CONTROL.
6. PURLINS/JOISTS/TRUSSES MUST BE DESIGNED TO WITHSTAND WIND LOADS AS REQUIRED FOR EACH APPLICATION AND ARE THE RESPONSIBILITY OF OTHERS.
7. REQUIRES APPLIED LAP SEALANT FOR ROOF SLOPE < 3:12.

DRAWN BY: B.S.	CHECKED BY: D.S.
PLOT:	DATE: 9/25/20

NO.	REVISION DESCRIPTION	BY	DATE

DRAWING TITLE: 7/8" CORRUGATED ROOF PANEL

CONSULTANTS
BALA SOCKALINGAM, PH.D., P.E.
1216 N LANSING AVE, SUITE C
TULSA, OK 74106
PHONE: 918-492-5992 FAX: 866-366-1543

MANUFACTURER
METAL SALES MANUFACTURING CORP.
545 SOUTH 3RD ST., SUITE 200
LOUISVILLE, KY 40202
502-855-4300

DRAWING NO. 2394-1 REV.

METAL SALES MANUFACTURING CORPORATION
7/8" Corrugated Panel Uplift Loads
(Min 24 ga.)

Description	Fastener Spacing along panel length (in)	Allowable Uplift Load (psf)
Coverage width: 32"	**24**	**156.4**
	27	150.0
Panel Fasteners	30	143.6
#12-14 x 2" long hex head	33	137.2
screws with sealed washer	36	130.8
	39	122.5
Panel fasteners spaced at 8"	42	113.7
o.c. across panel width with	45	106.1
two fasteners at each sidelap.	48	99.5
	51	93.6
Sidelap fasteners spaced at	54	88.4
12" o.c.	57	83.8
	60	**79.6**

Notes:

1. The bold numbers indicate design loads calculated from test data with safety factor of 2.
2. Panels must be installed as per Evaluation Report FL 10999.1 and Metal Sales current installation procedure.
3. Three or more spans condition.

BALA SOCKALINGAM
LICENSE
No 62240
STATE OF
FLORIDA
PROFESSIONAL ENGINEER

9.28.2020

1216 N Lansing Ave., Suite C
Tulsa, Ok 74106
918 492 5992

Bala Sockalingam, Ph.D., P.E.
FL 62240